DuraPanel® Delta 35 1200

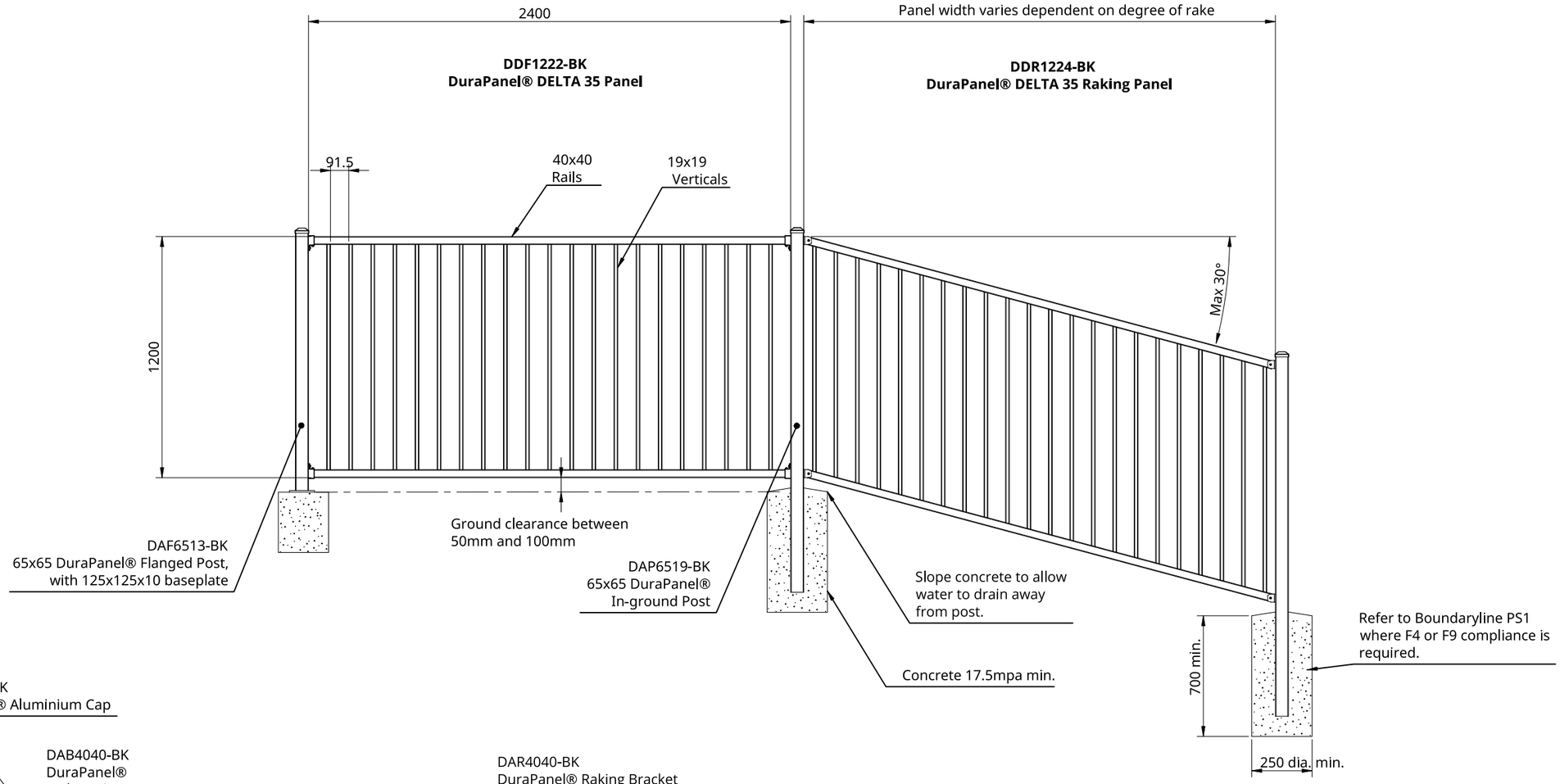

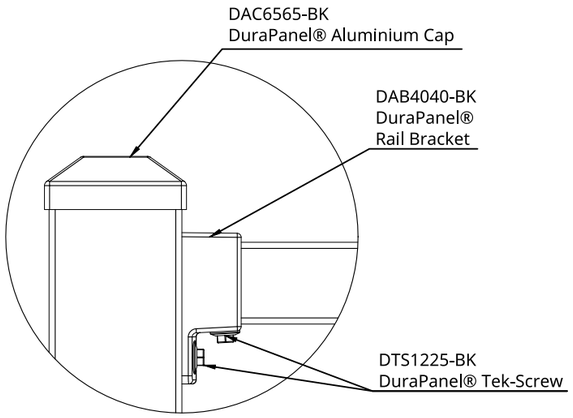

Panel Bracket Detail
1:3

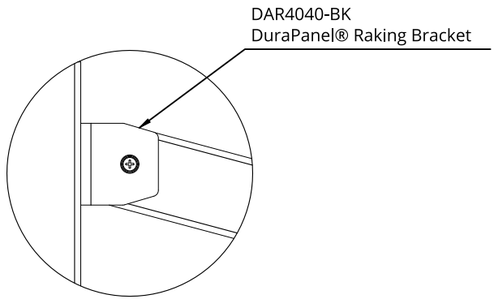

Raking Panel Bracket Detail
1:3

Boundaryline
Boundaryline Ltd.
60 Basstian Street, Invercargill
Phone: 0800 003 006
Email: enquiries@boundaryline.co.nz
Website: www.boundaryline.co.nz
All rights reserved to Boundaryline Ltd.
© Copyright June 2025.

SIZE	DATE ISSUED
A3	2025-03-23
REV.	SHEET 1 of 1
SCALE 1:25	DO NOT SCALE DRAWING

NAME	CODE	HEIGHT x WIDTH (mm)	RAIL PROFILE (mm)	C-POSTS (mm)	FLANGED POSTS (mm)	IN-GROUND POSTS (mm)	POST CAPS
DuraPanel® DELTA 35 Panel	DDF1224-BK	1200 x 2400mm	40 x 40mm		65 x 65 x 1300mm	65 x 65 x 1900mm	External Aluminium Caps (Standard) Internal Plastic Caps (Optional)
DuraPanel® DELTA 35 Raking Panel	DDR1224-BK	1200 x up to 2400	40 x 40mm		65 x 65 x 1300mm	65 x 65 x 1900mm	External Aluminium Caps (Standard) Internal Plastic Caps (Optional)